CENTRAL BLOWER CO.

211 S. 7TH AVE.
CITY OF INDUSTRY, CA 91746
(626) 330-3182 FAX (626) 330-9406
www.centralblower.com

BACKWARD INCLINED UPBLAST DISCHARGE RESTAURANT UTILITY SET

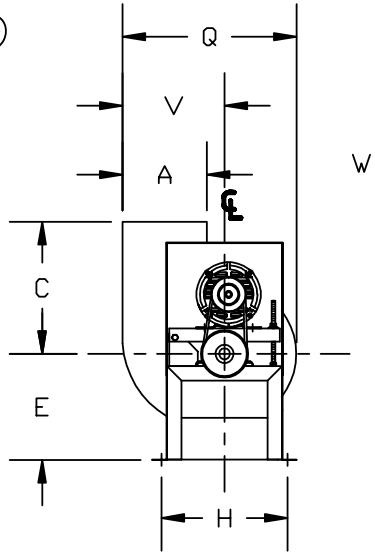

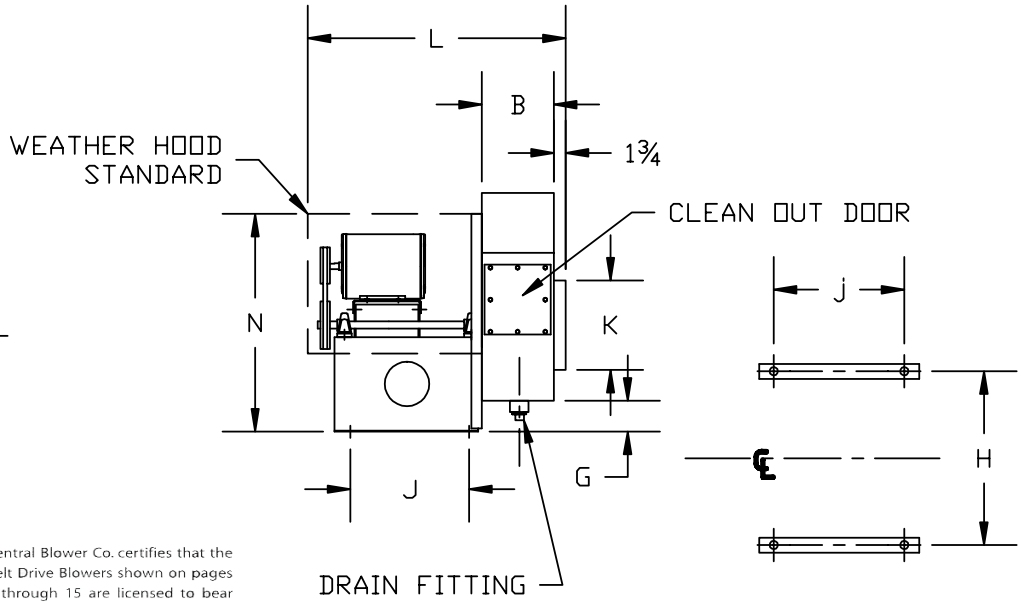

91Z0
Central Type RE Centrifugal Blowers are available as U.L. Listed for Grease Removal (UL762)

amca CERTIFIED RATINGS
AIR PERFORMANCE
AIR MOVEMENT AND CONTROL ASSOCIATION, INC.

Central Blower Co. certifies that the Belt Drive Blowers shown on pages 2 through 15 are licensed to bear the AMCA Seal. The ratings shown are based on tests and procedures performed in accordance with AMCA Publication 211 and comply with the requirements of AMCA Certified Ratings Program.

MODEL	WHEEL DIA.	A	B	C	E	G	H	J	K	L	N	P	Q	T	V	SHAFT DIA.
9 BI	9 3/16	7 1/2	6 3/8	10 3/4	9 3/8	1 3/4	11 3/8	10 1/2	7 7/8	23	19 1/4	3/8	15 3/8	4 1/2	8 3/4	5/8
10 BI	10 5/8	8 1/4	8 1/4	13	10 1/4	1 5/8	13	11	9 7/8	26 1/2	21 3/4	3/8	17 1/4	5 3/4	9 3/4	3/4

PROJECT:	ENGINEER:	CERTIFIED BY:
LOCATION:	CONTRACTOR:	TITLE:
ARCHITECT:		DATE:

ITEM	MODEL NO.	QTY.	CFM	O.V.	SP	RPM	HP	VOLT	PHASE	CYCLE	ARRNG.	WGT.	ACCES. & REMARKS