CENTRAL BLOWER CO.

211 S. 7TH AVE.
CITY OF INDUSTRY, CA 91746
(626) 330-3182 FAX (626) 330-9406
www.centralblower.com

BACKWARD INCLINED UPBLAST DISCHARGE

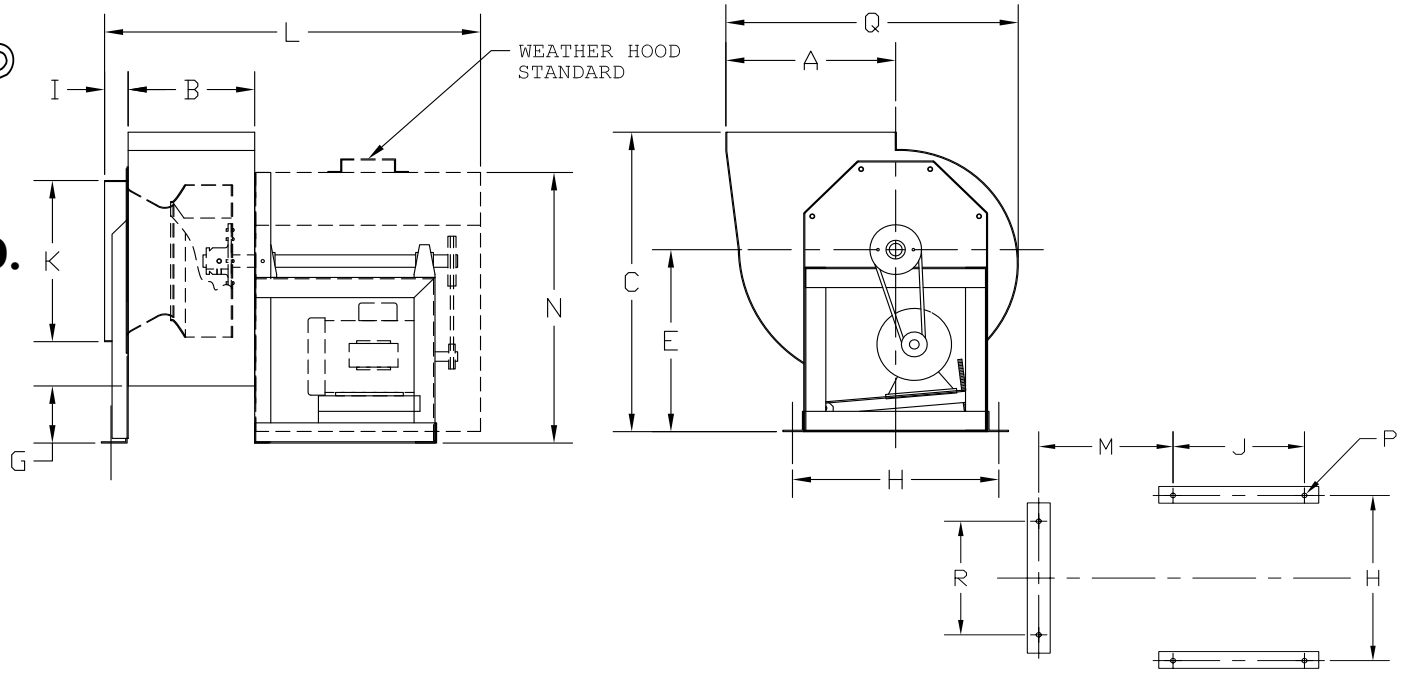

MODEL	WHEEL DIA.	A	B	C	E	G	H	I	J	K	L	M	N	P	Q	R	SHAFT
12 BI	12 1/4	13 1/8	9 13/16	24 1/16	14 5/8	3 11/16	16	1 3/4	11 1/2	13	29	11 3/4	21 3/4	7/16	22 5/8	11	1
15 BI	15	16 1/8	12	29 1/8	17 5/8	4 1/4	19	2	12 1/2	15 7/8	32	14 1/8	26 1/4	9/16	27 5/8	14	1
18 BI	18 1/4	19 9/16	14 5/8	35 1/2	21 1/2	5 1/4	22 5/8	2	15 5/16	19 5/16	38 1/8	16 7/8	31 7/8	9/16	33 5/8	18	1 3/16
20 BI	20	21 7/16	15 15/16	38 7/8	23 1/2	5 23/32	22 5/8	2 3/16	15 5/16	21 3/16	39 7/16	18 3/16	33 7/8	9/16	36 7/8	22 5/8	1 3/16
22 BI	22 1/4	23 13/16	17 13/16	42 7/8	25 7/8	6 1/16	26 1/8	2 1/4	16 1/2	23 1/2	43 15/16	20 1/8	37 15/16	9/16	40 15/16	20	1 3/16
24 BI	24 1/2	26 3/16	19 5/8	49 9/16	27 7/8	6 1/8	26 1/8	2 1/4	16 1/2	25 7/8	45 1/16	21 15/16	39 15/16	9/16	45 15/16	26 1/8	1 3/16
27 BI	27	29	21 5/8	52	31 1/4	7 1/4	30 3/8	2 1/4	18 3/8	28 9/16	49 1/8	24 1/4	45 27/32	9/16	49 13/16	24	1 7/16
30 BI	30	32 3/16	24	59 1/4	36 1/4	9 1/2	39	2	20 11/16	31 1/2	58	26 15/16	54 1/4	9/16	55 1/2	39	1 11/16
36 BI	36 1/2	39 1/8	29 3/16	71 3/8	43 7/8	11 3/8	47	2	22 7/8	38 5/8	70	31 9/16	65 7/8	9/16	67 3/16	47	1 15/16

PROJECT:	ENGINEER:	CERTIFIED BY:
LOCATION:	CONTRACTOR:	TITLE:
ARCHITECT:		DATE:

ITEM	MODEL NO.	QTY.	CFM	O.V.	SP	RPM	HP	VOLT	PHASE	CYCLE	ARRNG.	WGT.	ACCES. & REMARKS