CENTRAL BLOWER CO.

211 S. 7TH AVE.
CITY OF INDUSTRY, CA 91746
(626) 330-3182 FAX (626) 330-9406
www.centralblower.com

SERIES 2FCD TWIN 4-WAY BLOWERS

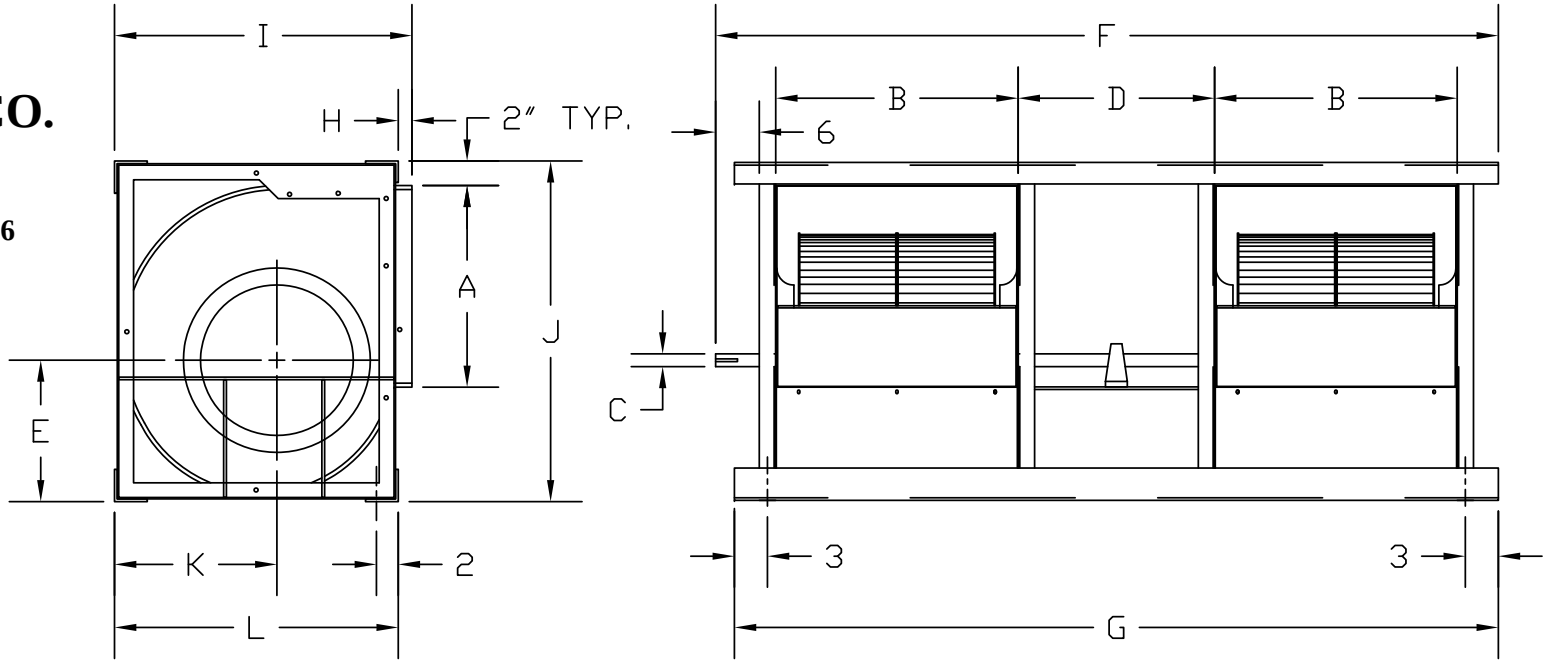

MODEL	WHEEL DIA.	A	B	C	D	E	F	G	H	I	J	K	L
2FCD-18	18 1/2 X 18 3/16	18 7/8	22 1/4	1 3/16	18	13 1/4	73 3/4	70	1 1/4	27 1/4	31 5/8	14 7/8	26
2FCD-22	22 1/2 X 22 3/16	26 5/16	27 1/4	1 7/16	22	17 1/4	88 1/2	84 1/2	1 3/8	35 3/8	41 5/8	20	34
2FCD-26	26 1/2 X 26 3/16	31 1/8	32	1 7/16	26	20 7/32	102	98	1 5/8	41 1/2	48 3/4	23 1/2	39 7/8
2FCD-30	31 X 30 1/4	35 7/8	37	1 11/16	30	23 5/16	116	112	1 5/8	47 3/4	55 7/8	26 15/16	46 1/8

PROJECT:	ENGINEER:	CERTIFIED BY:
LOCATION:	CONTRACTOR:	TITLE:
ARCHITECT:		DATE:

ITEM	MODEL NO.	QTY.	CFM	O.V	SP	RPM	HP	VOLT	PHASE	CYCLE	ARRNG.	WGT.	ACCES. & REMARKS