CENTRAL BLOWER CO.

211 S. 7TH AVE.
CITY OF INDUSTRY, CA 91746
(626) 330-3182 FAX (626) 330-9406
www.centralblower.com

FORWARD CURVE
BOTTOM HORIZONTAL
DISCHARGE

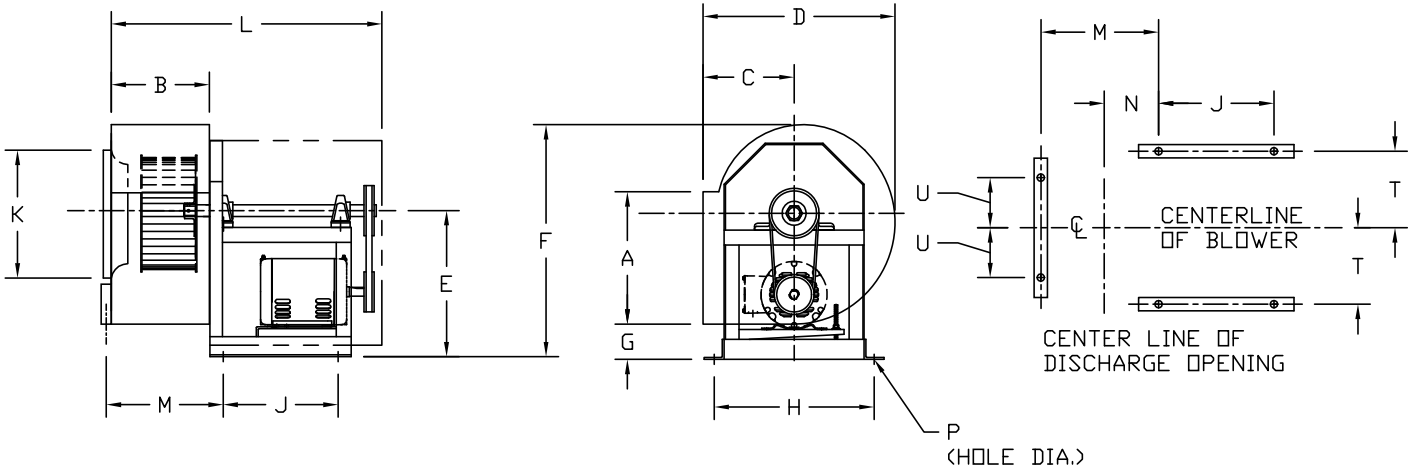

MODEL	WHEEL DIA.	A	B	C	D	E	F	G	H	J	K	L	M	N	P	T	SHAFT
FC 108	9	10 1/8	4 1/8	6 3/4	14 7/16	9 3/8	16 1/8	5/8	11 1/8	10 1/8	8 7/8	23	~	4 7/16	3/8	5 9/16	5/8
FC 109	9 1/8	10 1/8	6 3/8	6 3/4	14 7/16	9 3/8	16 1/8	5/8	11 1/8	10 1/8	8 7/8	23	~	4 7/16	3/8	5 9/16	5/8
FC 111	10 5/8	11 1/2	8 1/4	7 15/16	16 5/8	10 1/4	17 3/4	5/8	13	11	9 7/8	26	~	5 3/4	7/16	6 1/2	3/4
FC 112	12 5/8	13 3/8	8 1/4	9 1/8	19 3/8	14 5/8	23 5/8	3 1/8	16	11 1/2	11 7/8	27	~	5 3/8	9/16	8	3/4
FC 115	15	15 7/8	12 1/4	10 1/2	22 5/8	17 5/8	28 1/4	4 1/16	19	12 1/2	15 7/8	31 3/4	~	7 3/8	9/16	9 1/2	1
FC 118	18	18 7/8	12 1/4	12 3/8	27	21 1/2	34 3/8	5 1/8	22 5/8	15 5/16	17 7/8	35	~	7 3/8	9/16	11 5/16	1 3/16
FC 120	20	23 15/16	16 7/8	14	31 11/16	21 1/2	37 3/4	2 7/16	22 5/8	15 5/16	19 7/8	40 3/8	19 1/8	9 11/16	9/16	11 5/16	1 3/16
FC 122	22	26 3/8	16 7/8	15 3/8	34 7/8	25 7/8	42 5/8	3 5/8	26 1/8	16 1/2	21 7/8	41 1/2	19 1/4	9 3/4	9/16	13 1/16	1 3/16
FC 126	26	31 1/8	20	18	41	31 1/4	51	4 15/16	30 3/8	18 3/8	25 7/8	46 3/4	22 3/8	11 1/4	9/16	15 3/16	1 7/16
FC 130	30 1/4	35 7/8	23 1/4	20 3/4	48	31 1/4	54	7/8	30 3/8	18 3/8	29 7/8	51	25 1/2	12 7/8	9/16	15 3/16	1 7/16

PROJECT:	ENGINEER:	CERTIFIED BY:
LOCATION:	CONTRACTOR:	TITLE:
ARCHITECT:		DATE:

ITEM	MODEL NO.	QTY.	CFM	O.V.	SP	RPM	HP	VOLT	PHASE	CYCLE	ARRNG.	WGT.	ACCES. & REMARKS