CENTRAL BLOWER CO.

211 S. 7TH AVE.
CITY OF INDUSTRY, CA 91746
(626) 330-3182 FAX (626) 330-9406
www.centralblower.com

BACKWARD INCLINED BOTTOM HORIZONTAL DISCHARGE

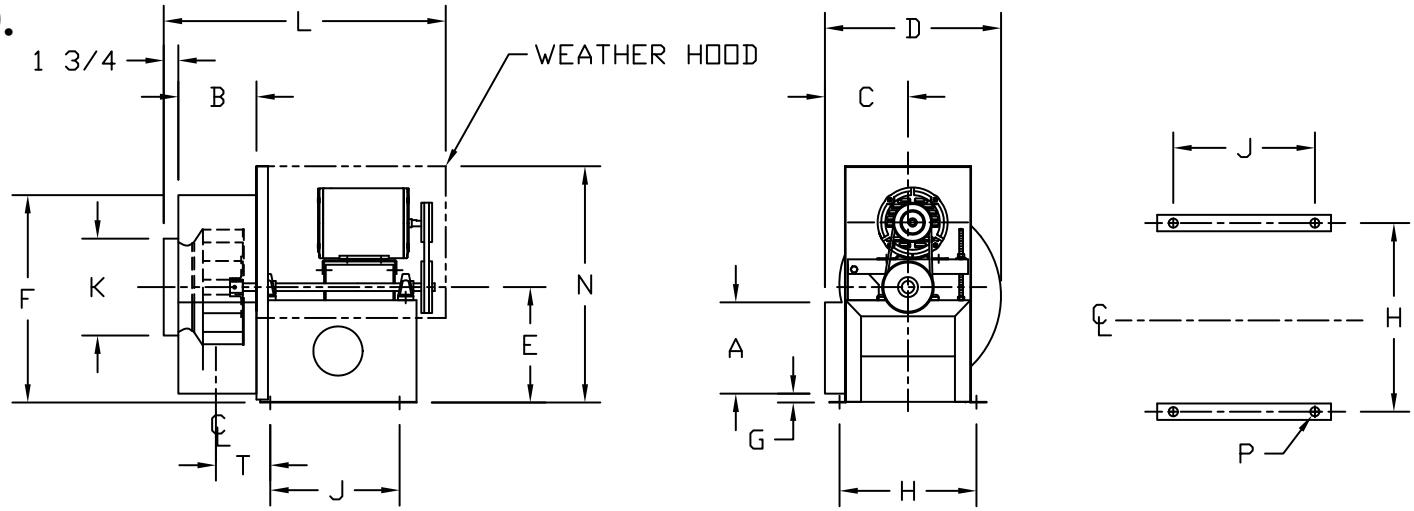

MODEL	WHEEL DIA.	A	B	C	D	E	F	G	H	J	K	L	N	P	T	SHAFT DIA.
9 BI	9 3/16	7 1/2	6 3/8	6 3/4	14 7/16	9 3/8	16 1/8	3/4	11 3/8	10 1/2	7 7/8	23	19 1/4	3/8	4 1/2	5/8
10 BI	10 5/8	8 1/4	8 1/4	7 15/16	16 5/8	10 1/4	17 3/4	9/16	13	11	9 7/8	26 1/2	21 3/4	3/8	5 3/4	3/4

PROJECT:	ENGINEER:	CERTIFIED BY:
LOCATION:	CONTRACTOR:	TITLE:
ARCHITECT:		DATE:

ITEM	MODEL NO.	QTY.	CFM	O.V.	SP	RPM	HP	VOLT	PHASE	CYCLE	ARRNG.	WGT.	ACCES. & REMARKS